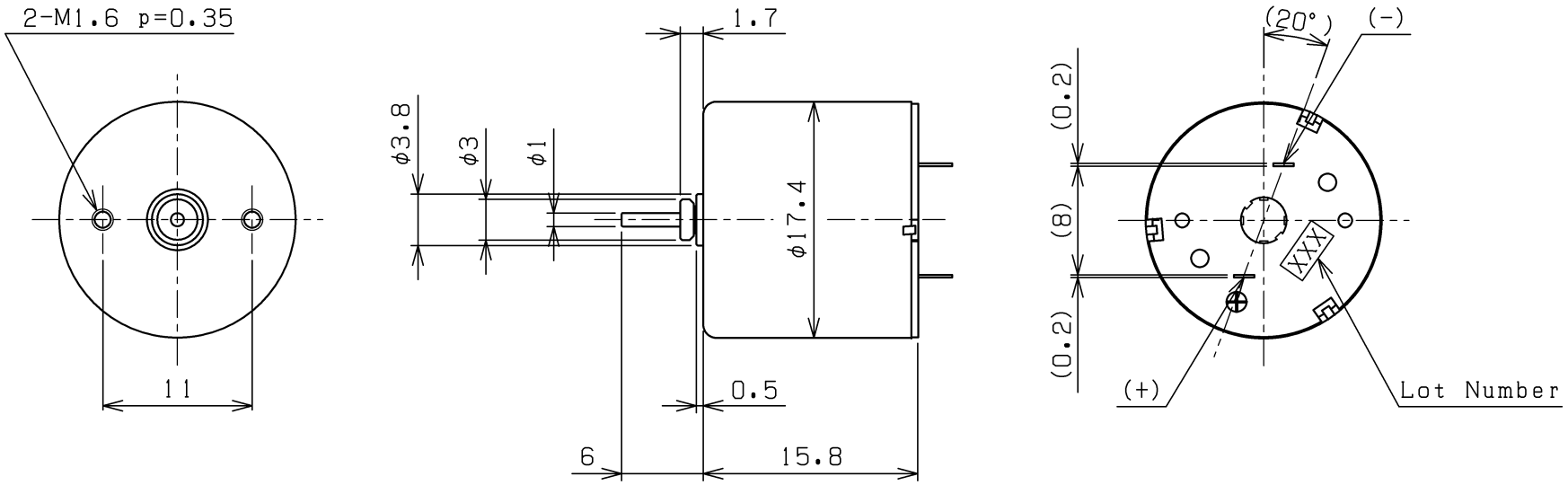
2-M1.6 p=0.35
11
φ3.8
φ3
φ1
1.7
φ17.4
0.5
6
15.8
(20°)
(-)
(0.2)
(8)
(0.2)
(+)
XXX
Lot Number