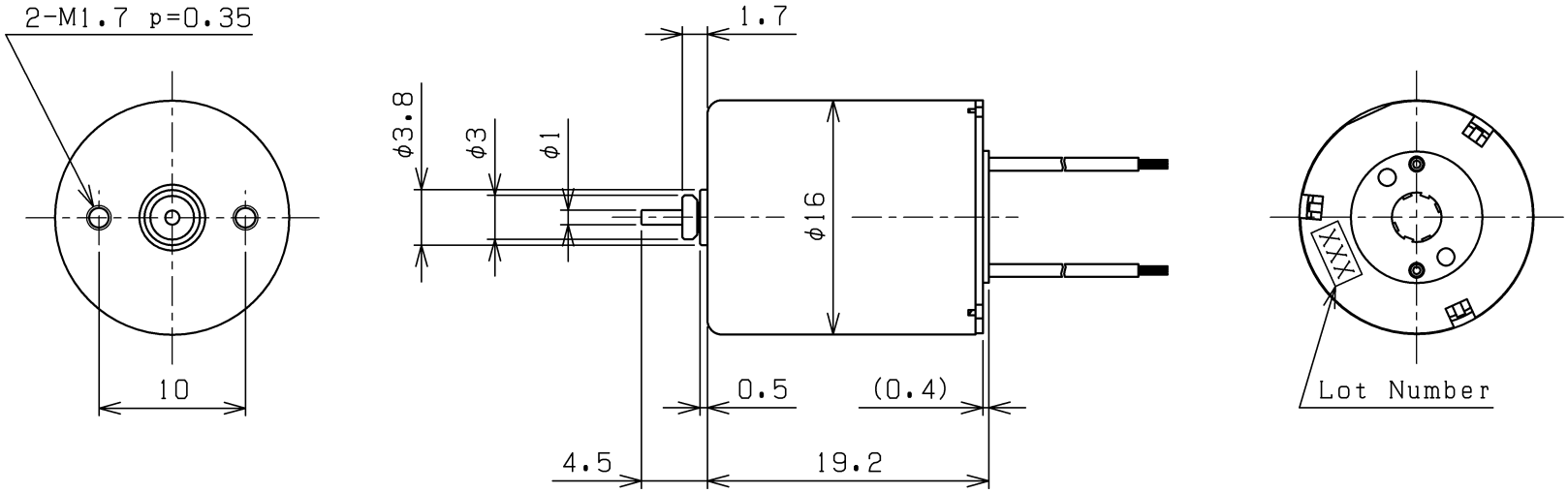
2-M1.7 p=0.35
10
1.7
φ3.8
φ3
φ1
φ16
0.5
(0.4)
4.5
19.2
XXX
Lot Number